SPECIFICATION APPLIED

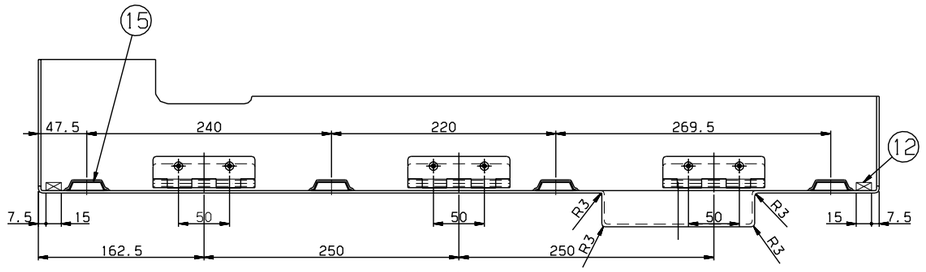

VIEW A-A

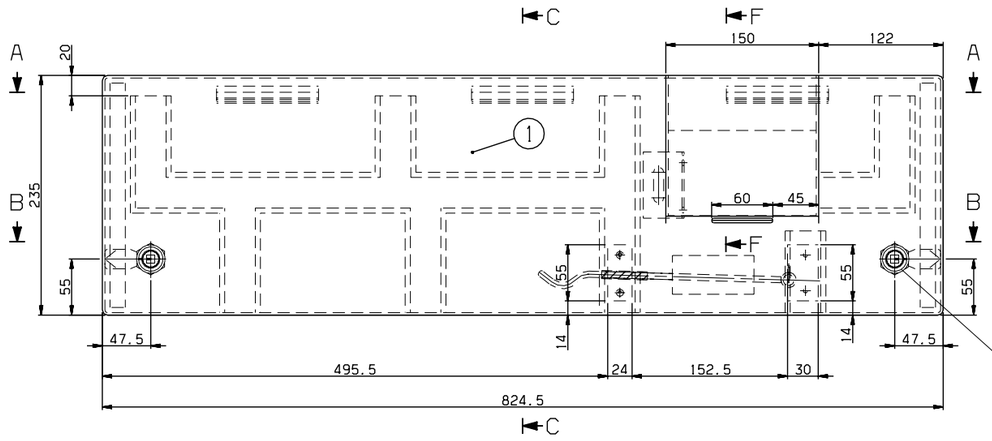

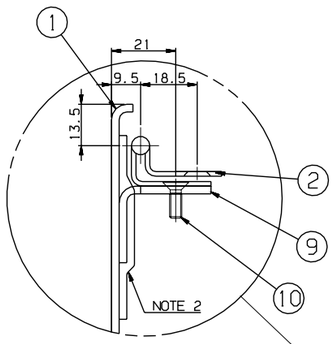

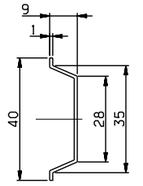

DETAIL #15
SCALE=1/1

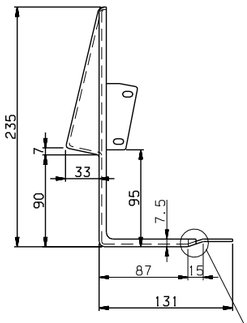

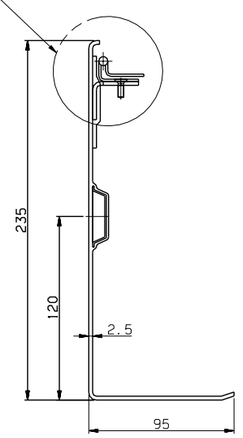

SECTION C-C

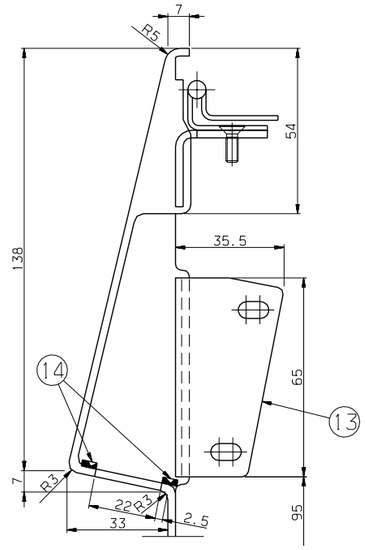

SECTION F-F
SCALE=1/1

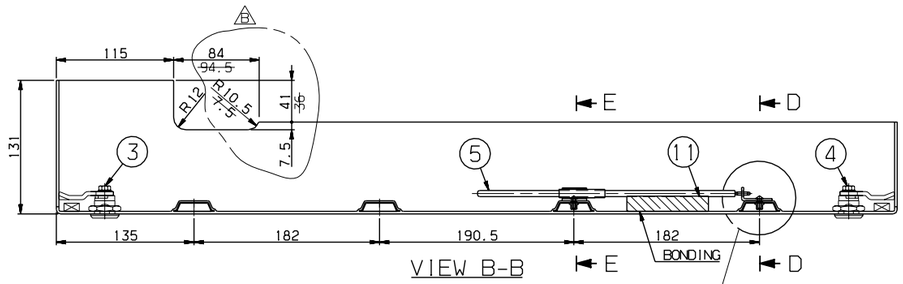

VIEW B-B

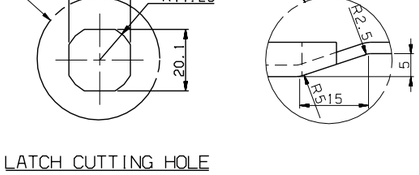

LATCH CUTTING HOLE

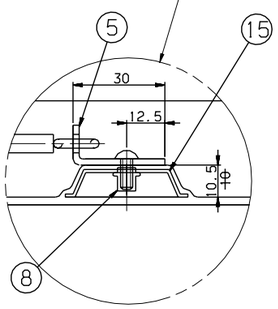

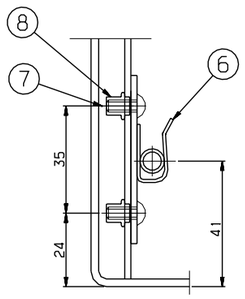

SECTION E-E
SCALE=1/1

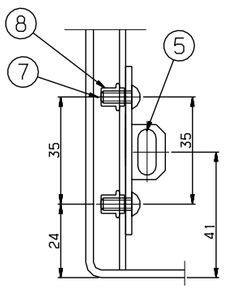

SECTION D-D
SCALE=1/1

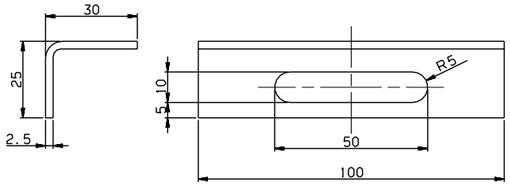

DETAIL #9
SCALE=1/1

NOTE
1. A INTERIOR PANEL'S COLOR AND SURFACE SHALL BE MANUFACTURED AFTER SAMPLE'S APPROVAL BY CUSTOMER.
2. PART 9 AND 13 SHALL BE SEALED WITH PART 1 AFTER INSTALLATION.

품번 NO.	부품 번호 PART NO.	품명 DESCRIPTION	재질 MATERIAL	수량 Q'TY	승인 V.T	비고 REMARKS
15	RFP55021AN0-015	STIFFENER	A1070BR	SET		1T
14	RFP55021AN0-014	PACKING	PE,FOAM	SET		T2X5
13	RFP55031AN0	BRACKET	ASSY	1		
12	RFP55021AN0-012	PACKING	EPDM FOAM	2		T8X15X225
11	RFP55021AN0-011	PAD.POLE	PE,FOAM	1		T15X22X80
10	RS60607-097S	SCREW F.H	SUS304	6		M4X12
9	RFP55021AN0-009	BRACKET	SUS304	3		
8	RFP55021AN0-008	NUTSERT	ASSY	4		9201B/M4/_Z,SPECIALINSERT
7	RS60610-066S	SCREW R.H	SUS304	4		M4X10
6	RFP55030AN0	POLE,CATCHER	ASSY	1		
5	RFP55029AN0	POLE,ASSY	ASSY	1		
4	RFP55028AN0-300	DEVICE,LOCKING	ASSY	1		
3	RFP55028AN0-301	DEVICE,LOCKING	ASSY	1		
2	RFP55027AN0	HINGE	ASSY	3		
1	RFP55021AN0-001	PANEL	FRP	1		

승인 APP	검도 CHK	설계 DGN	제도 DRG
H.G.RYU 2008.10.15	H.S.KIM 2008.10.15	Y.D.KIM 2008.10.10	S.H.SONG 2008.10.10

재질 MAT'L: ASSY
중량 G.W:
일반공차 MC B / VO B / CT B
SIZE A1
참고용 REF. NO. FPP08367

TITLE: COVER, INSIDE, TYPE B
도면 번호 DRG. NO: RFP55021AN0 MS
Ver. 00 Rev. -B
3D5101 RFP- 난-PRJT 심리분숨 CATIA
SCALE 1/2 매수 SHEET 1 of 1

기호 MARK	일자 DATE	변경 내용 DETAIL OF REVISION(E.C ZONE)	설변번호 E.C NO.	설계 DGN	검도 CHK	승인 APP
BX1	2009.12.10	CHANGED DIMENSION.	3D5101-U060	Y.D.KIM	H.S.KIM	H.G.RYU
AX11	2009.01.13	ADDED PART NO.15/CHANGED PART NO.8	3D5101-U033	Y.D.KIM	H.S.KIM	H.G.RYU

HYUNDAI Rotem 현대로템주식회사

본 도면은 당사 재산권에 해당하며 무단복사/배포 금지됨. PROPERTY OF ISSUING ENTITY, CANNOT BE DISTRIBUTED OR REPRODUCED WITHOUT AUTHORIZATION.

일반공차 GENERAL TOLERANCE			
치수 구분		A	B
용접 MIG/MAG	~ 40	2	4
	~ 30	2	3
	~ 10	1	1.5
	< 3	0.5	1
절삭 CUTTING	~3150	-	7
	~1600	4	5
	~ 800	3	4
	~ 400	2	3
	~ 200	1.5	2
	~ 100	1	1.5
등급 GRADE		A	B
주조 CASTING 용접, 구조물 (±)			
~ 20M		8	14 24
~ 15M		7	12 21
~ 12M		6	10 18
~ 8M		5	8 14
~ 4M		4	6 11
~ 2M		3	4 8
~ 1M		2	3 6
~ 315		1	2 4
~ 120		1	2 3
~ 30		1	1 1
등급 GRADE		A	B C
몰딩 MOLDING 구조물 (±)			
~ 20M		-	6.0 8.0
~ 15M		-	5.0 7.0
~ 12M		-	4.0 6.0
~ 8M		-	3.0 5.0
~ 4M		0.8	2.0 4.0
~ 2M		0.5	1.2 3.0
~ 1M		0.3	0.8 2.0
~ 315		0.2	0.5 1.2
~ 120		0.15	0.3 0.8
~ 30		0.1	0.2 0.5
3 ~ 6		0.05	0.1 0.2
등급 GRADE		A	B C
기계 가공품 (±) MACHINING			
규정사항은 일반공차와 같습니다 GENERAL TOLERANCE			